DATA SHEET

Industrial Monitor

839405T Brass Spit-Fire for cold weather

Features:

- **Construction:** All brass with vaned 4” waterway
- **Stream:** #284-B brass shaper included
- **Motors:** 120 VAC, TENV synchronous motors (non-arcing)
  - Constant torque output and current in start, running, and stall
  - UL recognized for Class I, Division 2 use, IP67 rated
  - Will not cause damage or increase in current when motor is stalled
  - Instantaneous start, stop, and reverse
  - Residual (power off) torque is always present
  - Long life and exceptional reliability
  - 120 VAC, 50/60 Hz., 1 Phase, 0.80 AMP current per motor
  - Suitable for continuous use
- **Rate of Motion:** If original system was not equipped with high torque gearing and utilized “park” and “oscillate” functions, contact Elkhart Brass for a program update/change
  - Rate of Horizontal Motion: With 3:1 gear ratio - 0.417 Sec/°
  - Rate of Vertical Motion: With 4:1 gear ratio - 0.548 Sec/°
- **Junction Box:** Corrosion resistant ATEX certified & UL listed enclosure with terminals for hazardous locations. Stainless steel motor cable junction box with bracket to attach to monitor, flange base included.
- Meets NEC (NFPA 70) Article 501 requirements for use in Class I, Groups A, B, C, & D, Division 2 & Article 505 - Class I, Zone 2, A Ex nA IIC T4 hazardous location areas.
- Exceeds FM operational requirements at -40°C

Spit-Fire Monitor

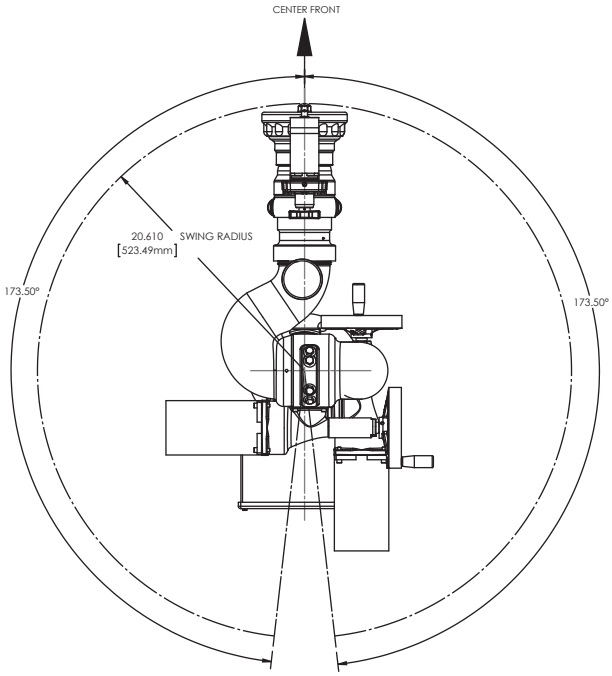

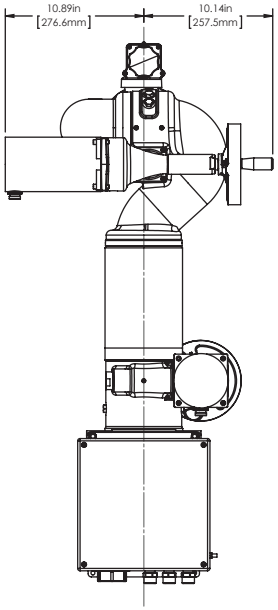

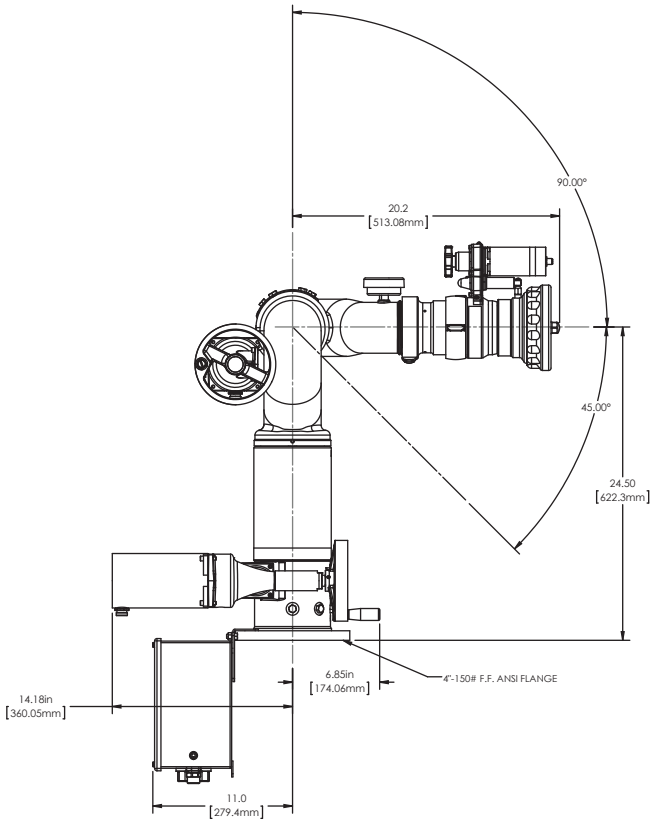

© 2015 Elkhart Brass Mfg. Co., Inc. • www.elkhartbrass.com

DATA SHEET

Spit-Fire 839405T Monitor

SPECIFICATIONS	
Model	839405T
Max Flow	2000 GPM (7570 LPM)
Max Pressure	200 PSI (13.79 BAR)
Inlet	4”-150# ANSI Flange
Outlet	3.5” Male NHT
Travel	V: -45° to +90° (135°)
	H: L173° to R173° (346°)
Input Power	120 VAC (50/60Hz.) 2 Phase as supplied by MMCP
Electrical Load	2 AMPS per monitor / 0.80 AMPS per motor
Temp Range	-40°F to +185°F (-40°C to +85°C)
Weight	300 Lbs. (136 Kg.)

8294053 Spit-Fire Static Pressure Drop
(4.0" Inlet and 3.5" Outlet)

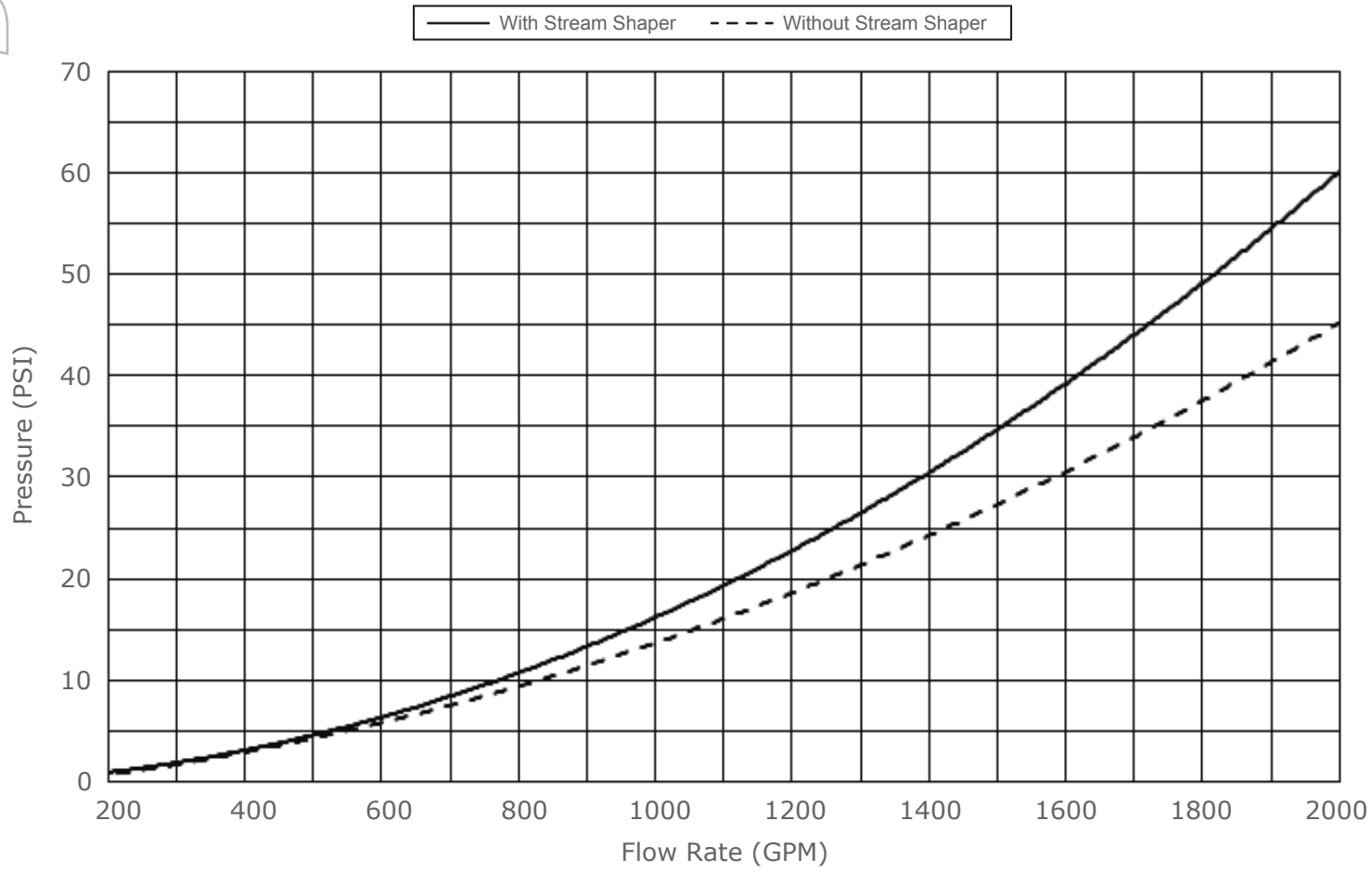

© 2015 Elkhart Brass Mfg. Co., Inc. • www.elkhartbrass.com